5084598-1 Product Details

Live Product Chat

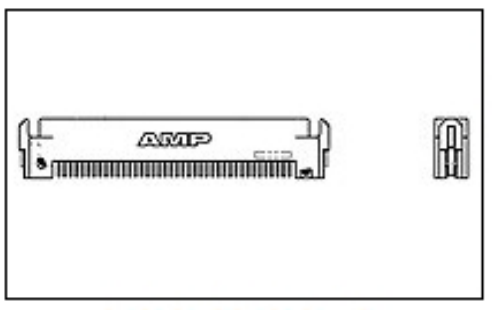

5084598-1

TE Part Number: 5084598-1
Active
Add to Part List

1.27 [.050] Series I, HD, FH and J Connectors

Always EU RoHS/ELV Compliant (Statement of Compliance)

Product Highlights:
- Connector
- Plug
- Number of Positions = 20
- 1.27 mm Centerline
- Standard Profile

View all Features | Find Similar Products

Quick Links
- Check Pricing & Availability
- Search for Tooling
- Product Feature Selector
- Contact Us About This Product

Documentation & Additional Information

Product Drawings:
- PLUG ASSY, STRADDLE MOUNT, CHAMP BLINDMATE .050 SERI... (PDF, English)

Catalog Pages/Data Sheets:
- None Available

Product Specifications:
- None Available

Application Specifications:
- None Available

Instruction Sheets:
- None Available

CAD Files: (CAD Format & Compression Information)
- 2D Drawing (DXF, Version O)
- 3D Model (IGES, Version O)
- 3D Model (STEP, Version O)

List all Documents

Additional Information:
- Product Line Information

Related Products:
- Tooling

Product Features (Please use the Product Drawing for all design activity)

Product Type Features:
- Product Type = Connector
- Gender = Plug
- Number of Positions = 20
- Profile = Standard
- PCB Mount Style = Straddle Mount
- PCB Retention Feature = Yes
- PCB Mount Angle = Right Angle, Vertical
- Connector Type = Blindmate
- PCB Polarization = Without
- Retention Leg Material = Brass
- Color = Black
- Sealed Bottom = Without
- Product Series = Series I

Mechanical Attachment:
- Retention Leg Plating = Tin over Nickel

Body Related Features:
- Centerline (mm [in]) = 1.27 [0.050]
- PCB Retention Method = Boardlock(s)

Contact Related Features:
- Contact Mating Area Plating Material = Gold (30) over Nickel
- Contact Material = Phosphor Bronze

Housing Related Features:
- Housing Temperature Rating = High
- Housing Material = Liquid Crystal Polymer (LCP)
- Housing Flammability Rating = UL 94V-0

Industry Standards:
- RoHS/ELV Compliance = RoHS compliant, ELV compliant
- Lead Free Solder Processes = Wave solder capable to 240°C, Wave solder capable to 260°C, Wave solder capable to 265°C, Reflow solder capable to 245°C, Reflow solder capable to 260°C, Pin-in-Paste capable to 245°C, Pin-in-Paste capable to 260°C
- RoHS/ELV Compliance History = Always was RoHS compliant

Operation/Application:
- Application = Fibre Channel Disk Drive, High Speed Serial Data, SCA2 (Single Connector Attachment)

Other:
- Brand = Tyco Electronics

© 2008 Tyco Electronics Corporation All Rights Reserved